Fastened Joint Analysis and Test Correlation of the MLA Beam Expander

Craig L. Stevens
Craig.Stevens@nasa.gov
Mechanical Systems Analysis & Simulation Branch
NASA Goddard Space Flight Center
Greenbelt, Maryland

FEMCI Workshop Presentation
May 6, 2004

Overview

1. Introduction
2. Problem Description
3. Pre-Test Analysis
4. Test Results
5. Model Correlation
6. Conclusions

Introduction

- Mercury Laser Altimeter (MLA) on Mercury Surface, Space Environment, Geochemistry, and Ranging (MESSENGER) spacecraft
- MLA produces accurate measurements of topography and measures Mercury's wobble (due to the planet's libration)
- MESSENGER Objectives:
  - Determine the structure of Mercury's mantle and crust
  - Investigate Mercury's polar caps
  - Determine the state of Mercury's core (fluid or solid?)
- MESSENGER developed by Johns Hopkins University Applied Physics Laboratory (APL)
- MLA developed by NASA Goddard Space Flight Center (Delivered to APL June 2003)
- Launch
  - August 2004
  - Delta II 2925H-9-5

Introduction

MESSENGER Configuration

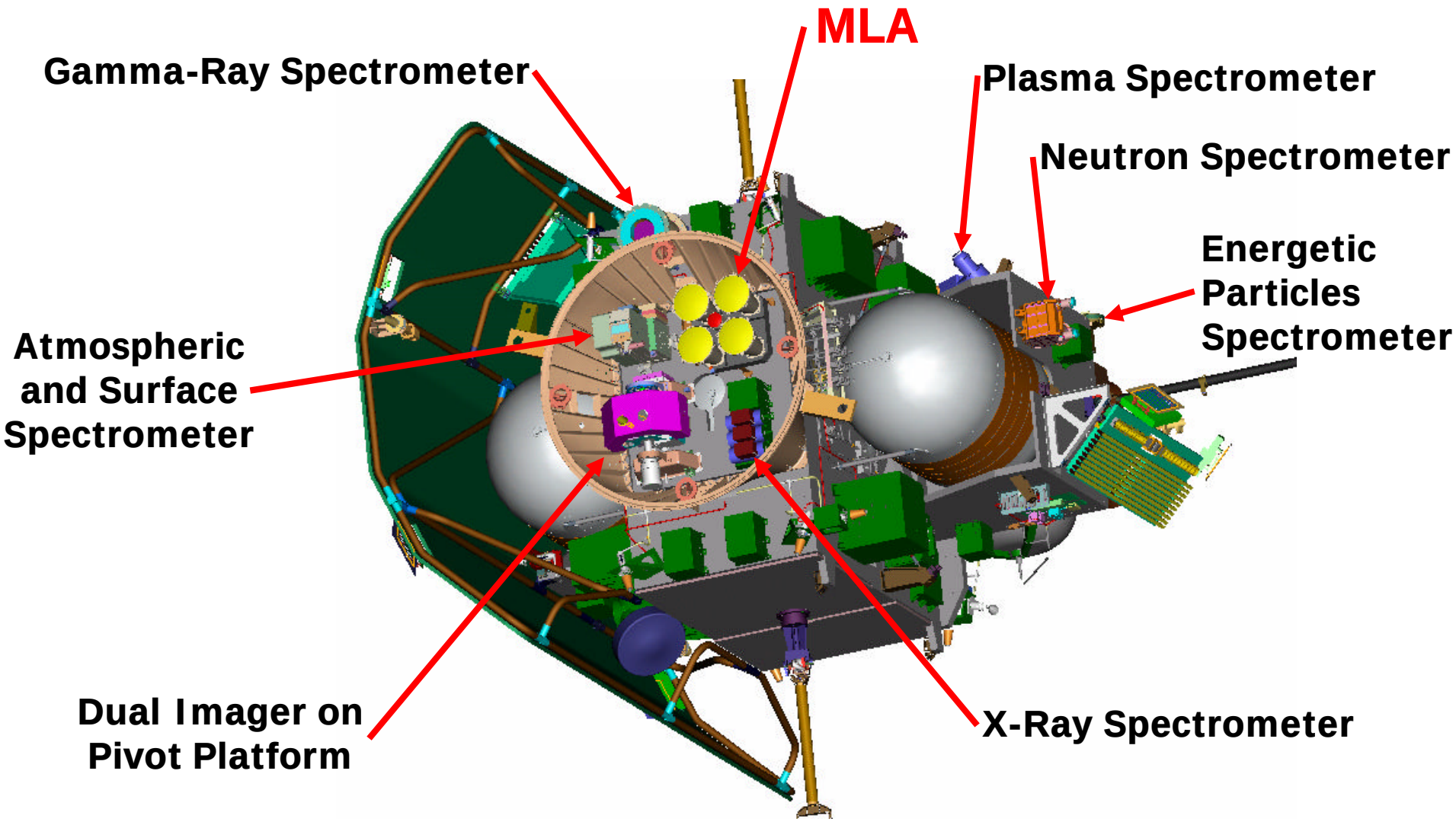

Introduction

MLA Configuration

Receiver tubes [4] (Be)

Laser beam expander (Be)

Laser bench (Be)

Main housing (Be)

Mounting flexures [3] (Ti)

Aft optics (Be)

Power Converter Assy.

Housing (Mg)

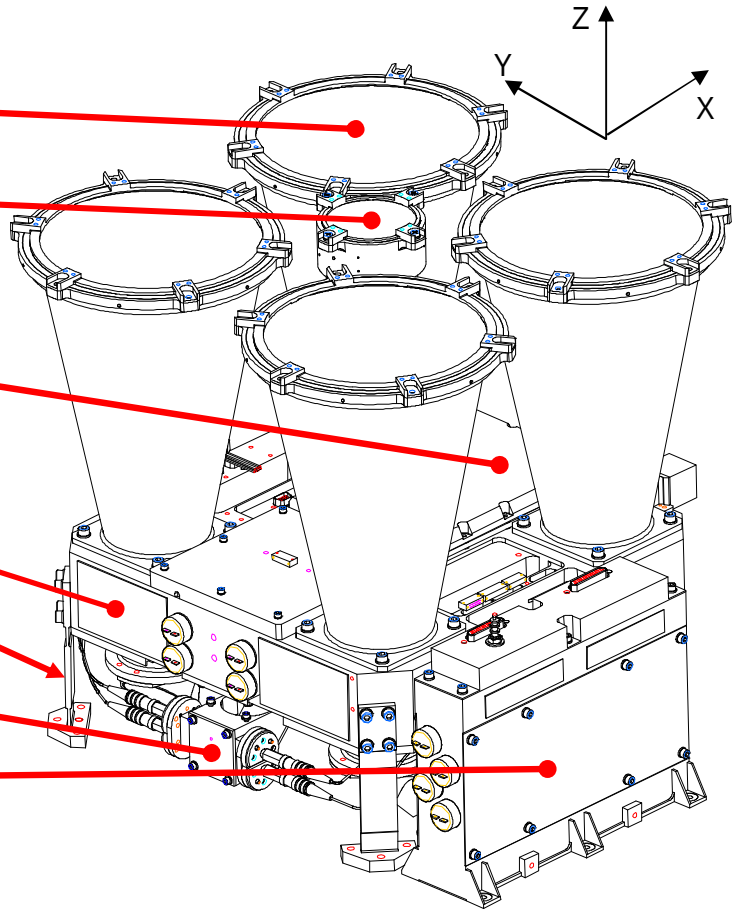

Problem Description

Flight laser bench with attached beam expander
- Three point mount: #2-56 fasteners
- Beam expander: mass ~0.4 lbm, height ~6.5”

MLA laser workmanship level vibration test/analysis
- Low level: 0.04 G2/Hz, 6.8 GRMS

Task:
- Pre Test Analysis: **Predict natural frequencies** and loads
- Correlate FEM with test data
- Investigate test anomalies and determine cause
- FEM:
    - CQUAD4 model
    - Fixed Base

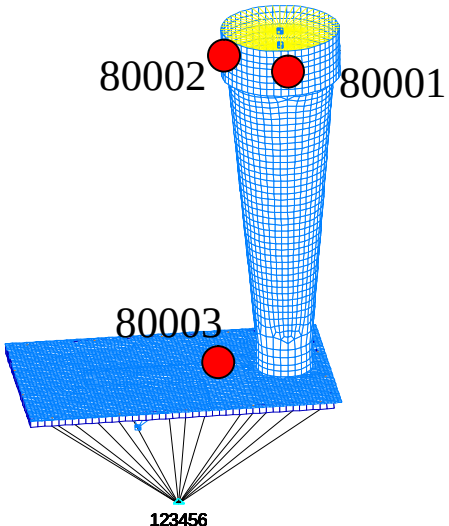

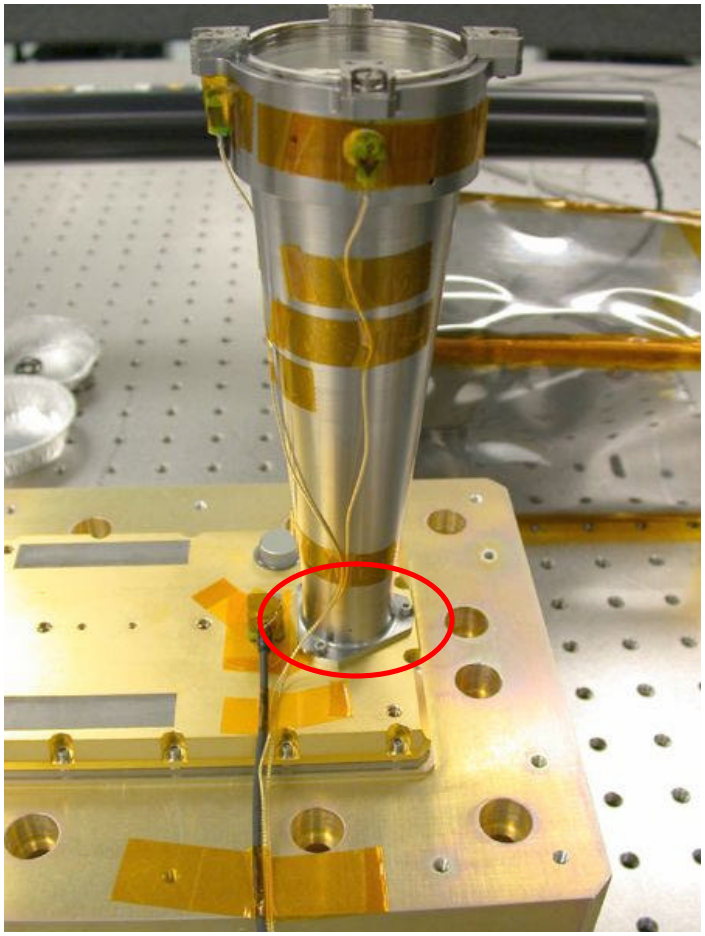

Pre-Test Analysis

- Initial joint stiffness estimated using tension joint theory

Bolt: $$K_b = \frac{E_b A_{Eff}}{L_b}$$

Fitting: $$K_f = \frac{pE_f D \tan(a)}{2\ln\frac{(L\tan(a)+d_w-D)(d_w+D)}{(L\tan(a)+d_w+D)(d_w-D)}}$$

where,

E_b = Bolt Young's modulus
A_{eff} = Bolt effective area
L_b = Grip
E_f = Fitting Young's modulus
D = Bolt diameter
L = Clamped fitting thickness
d_w = Washer diameter
a = Apex angle (assume 30°)

- Bolt carries 10% of applied load

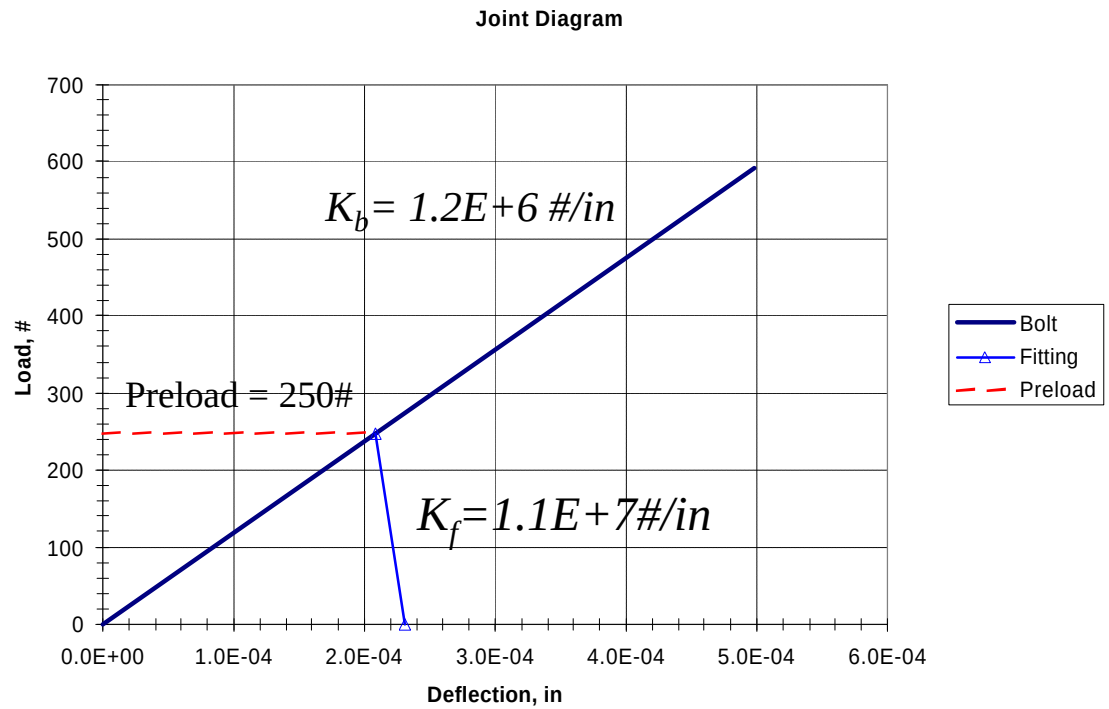

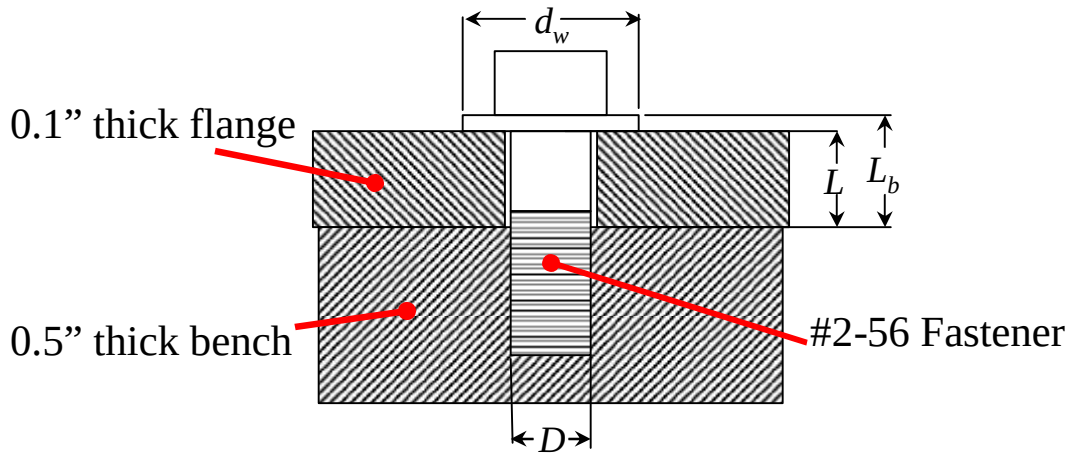

Pre-Test Analysis

- Use Springs (CELAS) to model joint stiffness:
  - Fitting stiffness = $K_f/4$ (9)
  - Bolt stiffness = K_b (3)
  - Normal constraints (center flange) = K_{NC} (3)
  - Normal constraints (near bolt) = K_{NCb} (6)

- Normal constraint locations chosen based on aluminum engineering model test data
- Value of K_{NC} and K_{NCb} chosen based on aluminum engineering model test data and fitting stiffness
  - Same order of magnitude as fitting stiffness
  - 1E+7 #/in
- X and Y shear forces reacted through bolts using RBE2

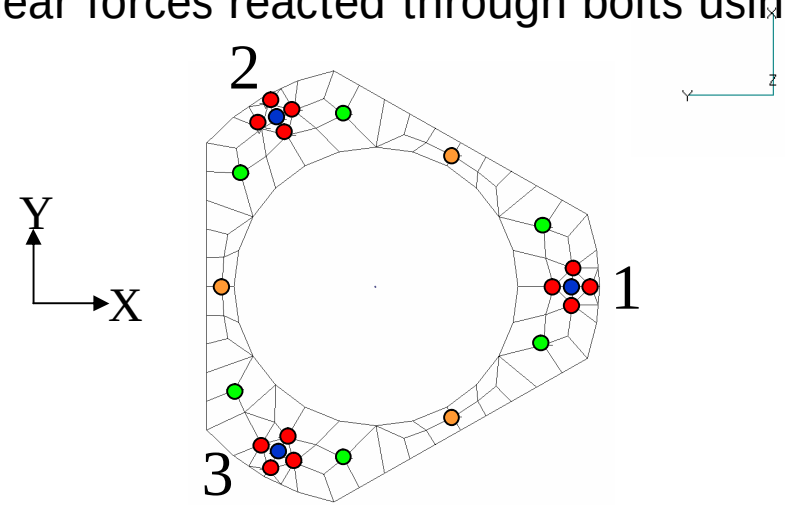

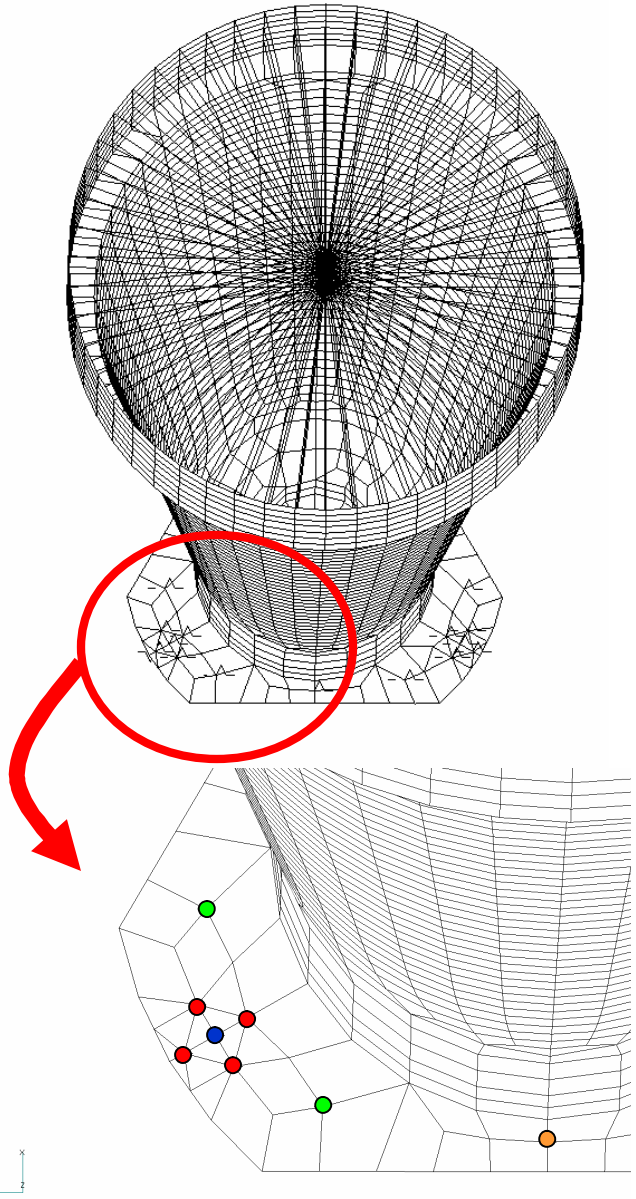

Pre-Test Analysis

Normal modes analysis:

MODAL EFFECTIVE MASS FRACTION: PRETEST							
MODE NO.	FREQ (Hz)	T1		T2		T3	
		FRACTION	SUM	FRACTION	SUM	FRACTION	SUM
1	509.8	**2.14E-01**	2.14E-01	4.65E-05	4.65E-05	6.76E-05	6.76E-05
2	518.3	4.05E-05	2.14E-01	**2.13E-01**	2.13E-01	3.77E-09	6.76E-05

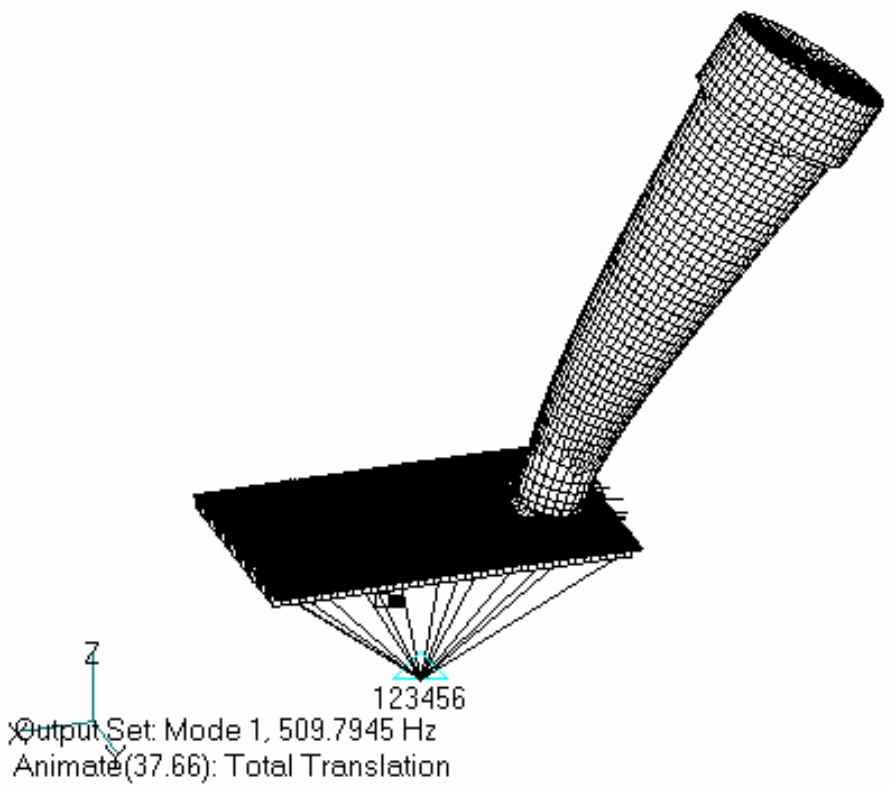

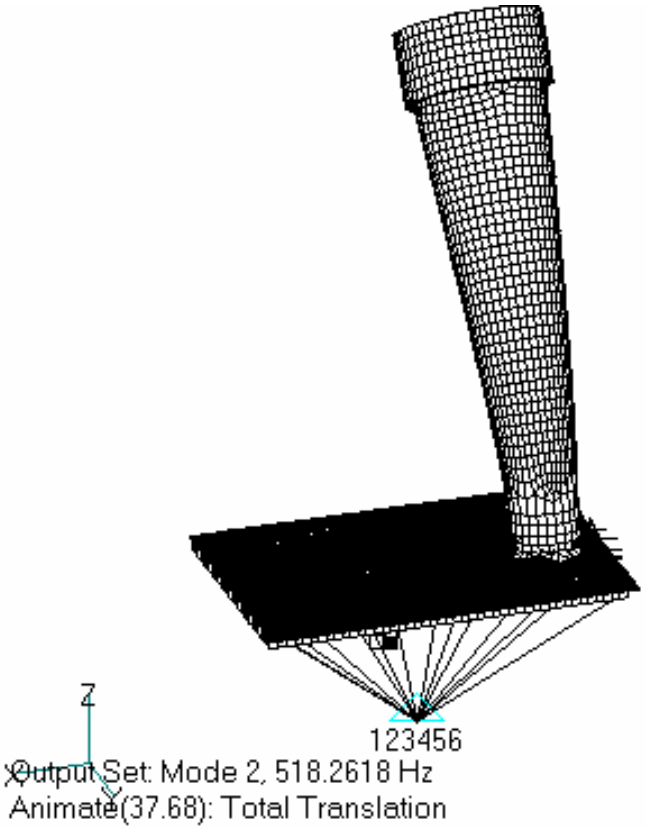

Test Results

Z-axis:

Test performed with no issues (no major modes)

Y-Axis:

Sine Signature Y

Modal Frequencies		
Item	X F_n (Hz)	Y F_n (Hz)
Analysis	510	518
PreSine Y	507	522

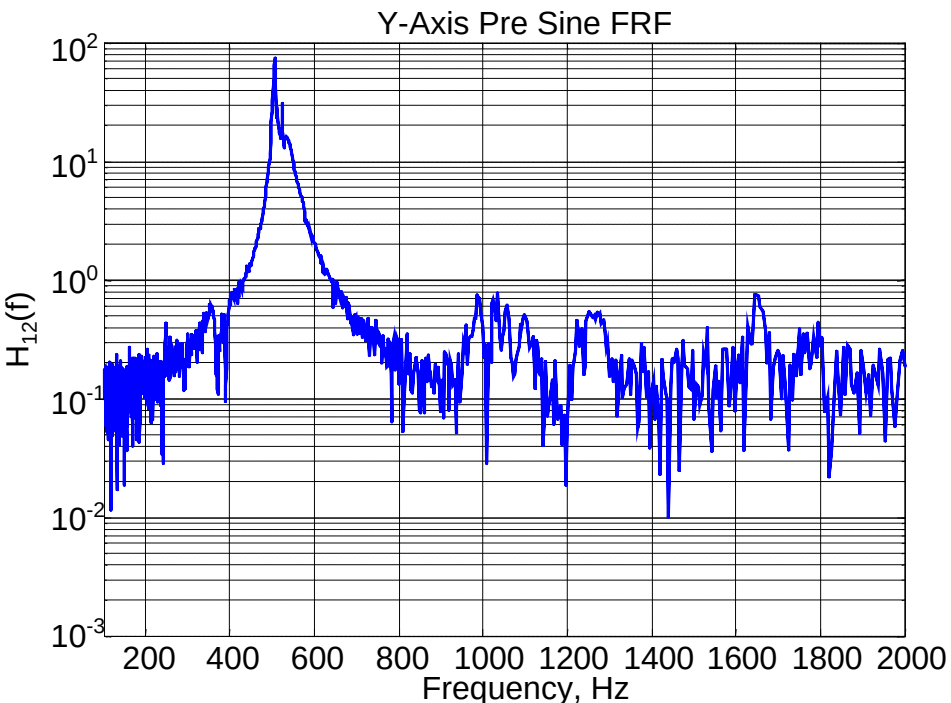

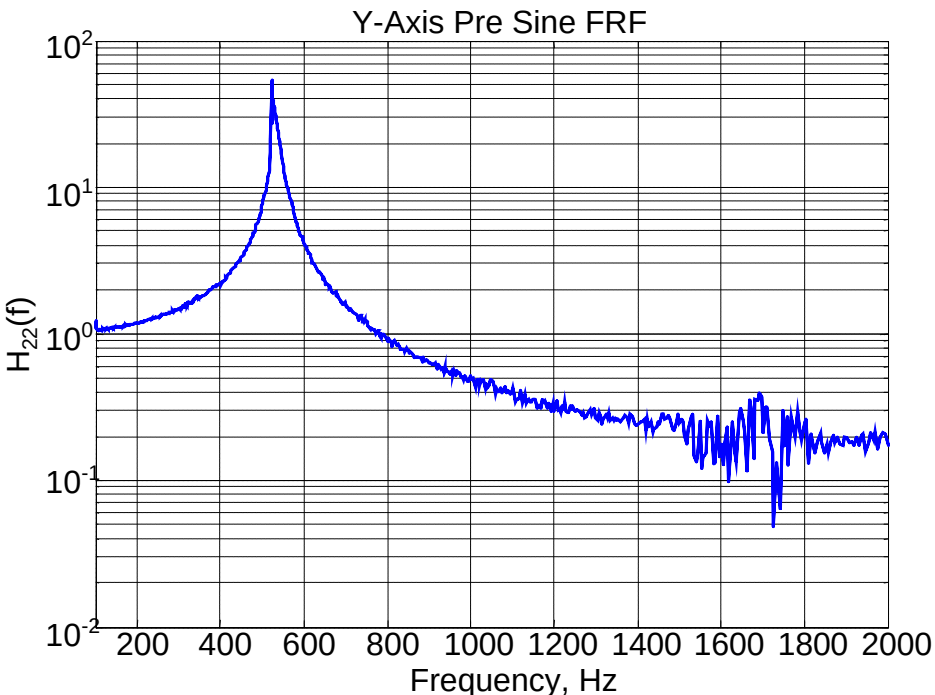

Test Results

Y-axis (cont'):

Frequency Migration			
Axis	Test	X F_n (Hz)	Y F_n (Hz)
Y	Pre Sine	507	522
	-18 dB	500	502
	-6 dB	444	440
	Full Level	402	410
	Post Sine	482	451

- Frequency shift as random vibration levels increased:

- Harmonics observed in random beam expander responses
  - Integer multiples of resonant frequency
  - Indicates nonlinear response
  - Not present in sine runs

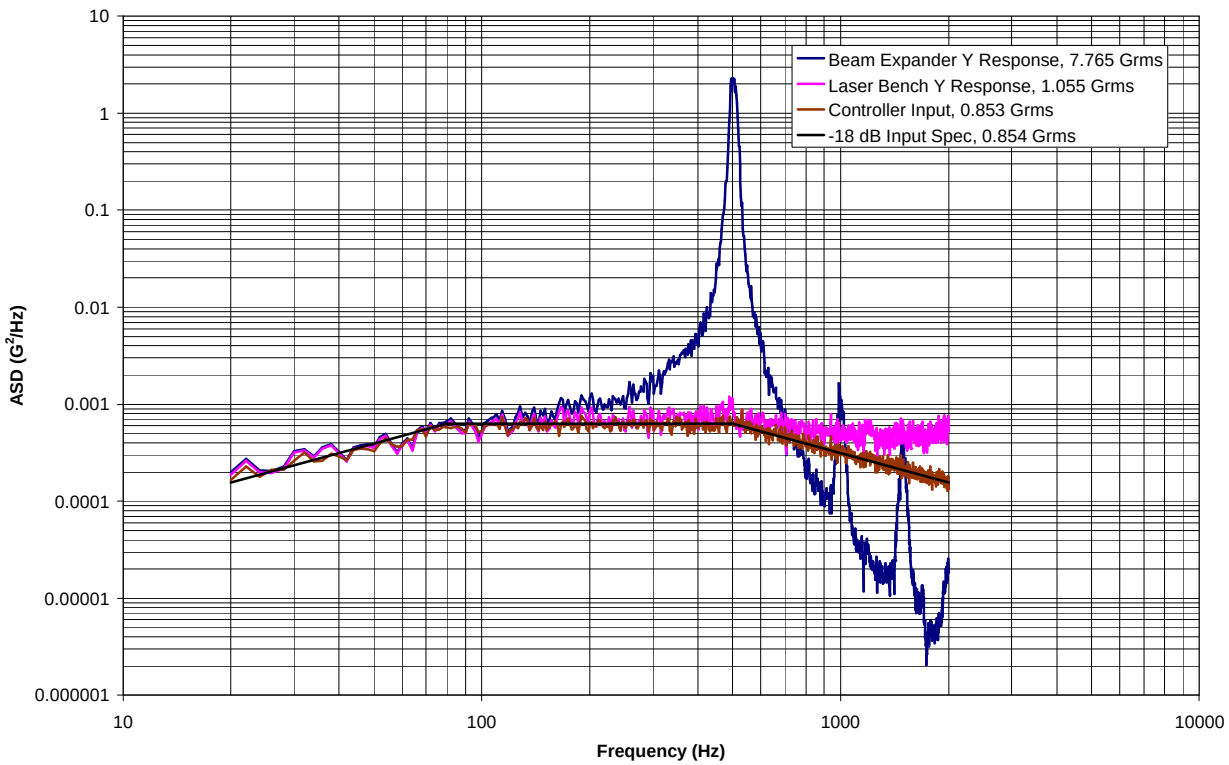

Test Results

Why do harmonics of resonant frequency exist?:

- Asymmetrical distortion of sine wave

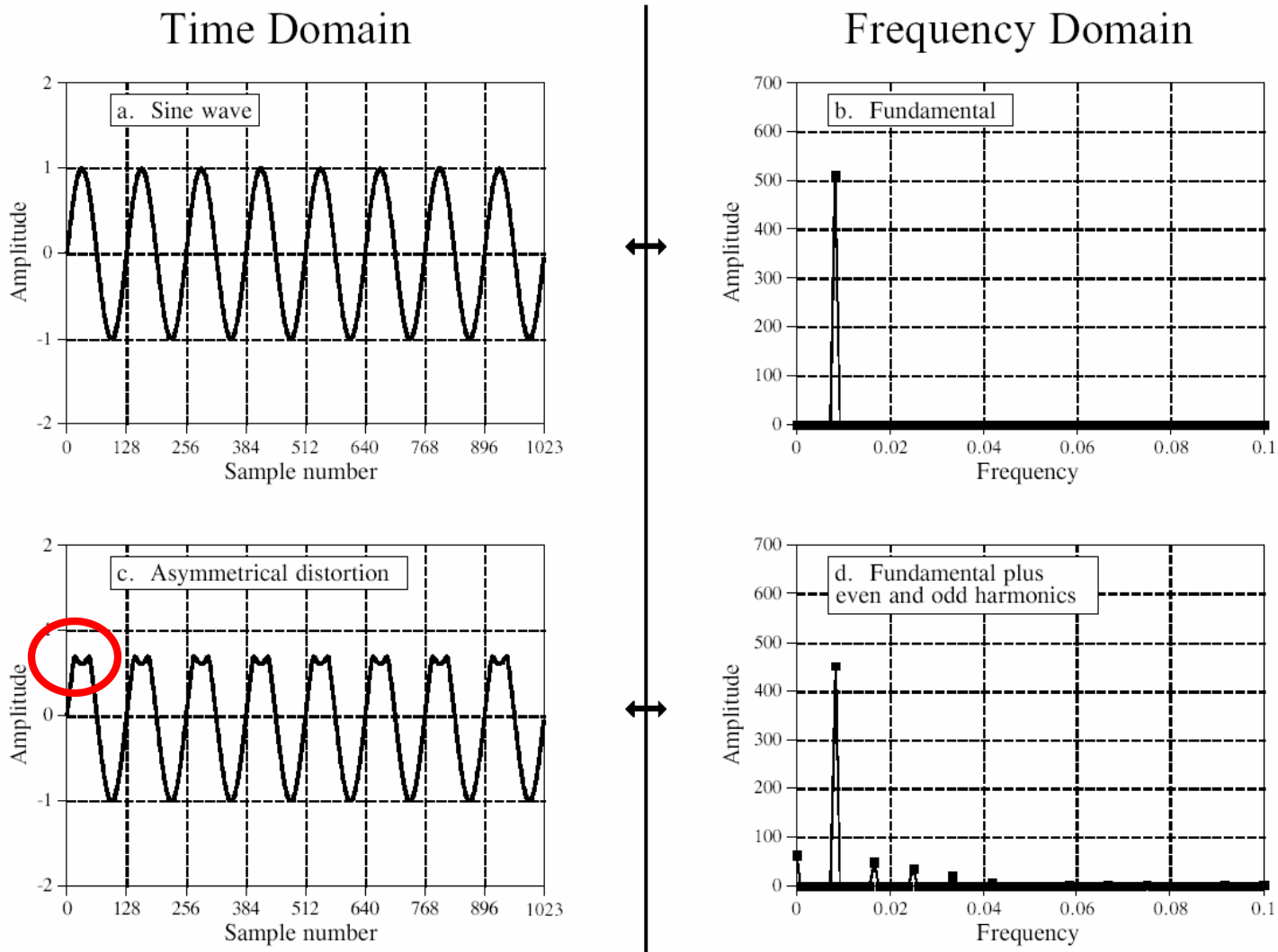

- Several reasons:
  Contact
  Boundary Condition

Test Results

- Frequency shifts observed in pre and post sine sweeps
- Modal frequencies drop over 10%
- X and Y modes switch order

Modal Frequencies		
Item	X F_n (Hz)	Y F_n (Hz)
PreSine Y	507	522
Post Sine	482	451

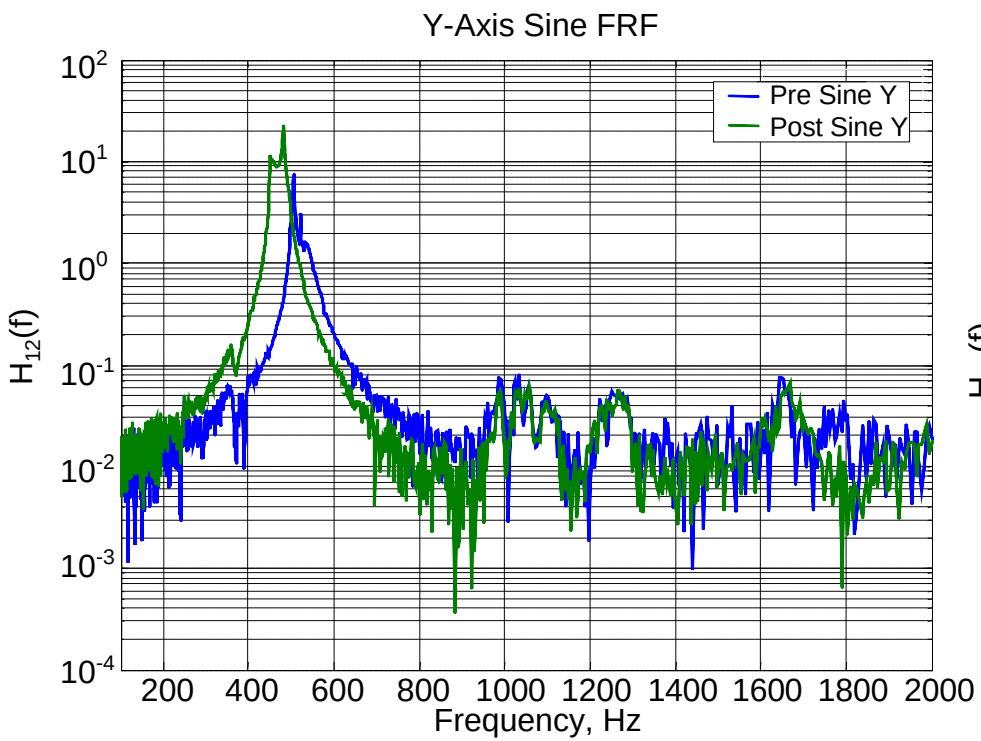

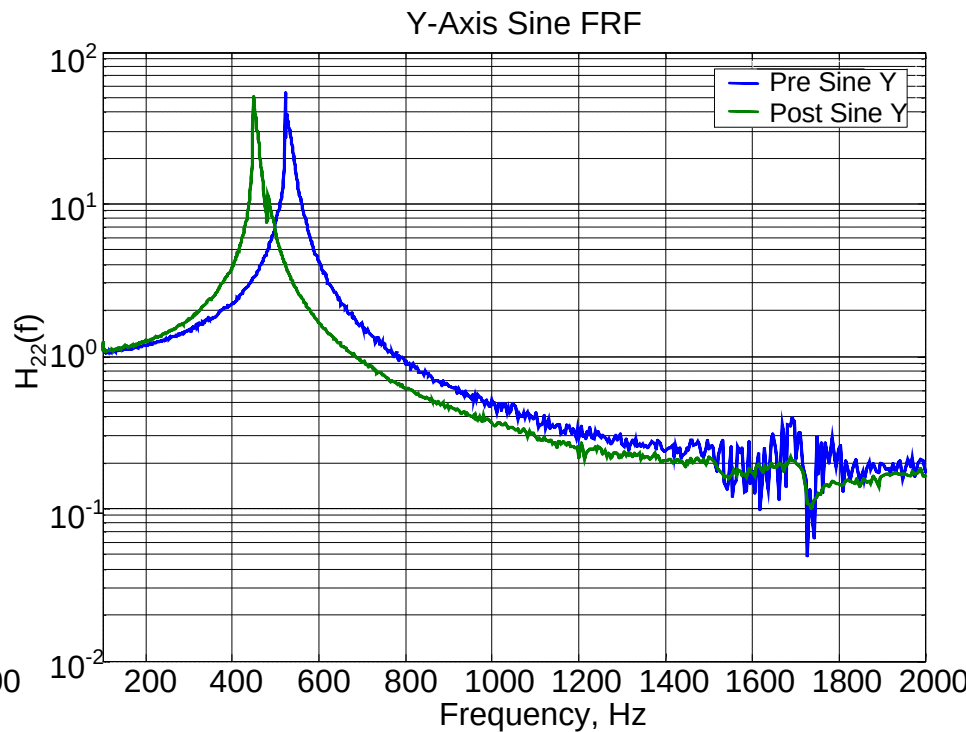

Model Correlation

- Use MSC NASTRAN Solution 200 to correlate model and investigate frequency shift
- Assume linear modes and mode shapes
- Vary CELAS stiffnesses to investigate preload loss
- Key cards:
  - MODTRAK: Performs cross orthagonality check to ensure proper modes meet constraints
  - DEQATN: Create Least squares objective function formulation

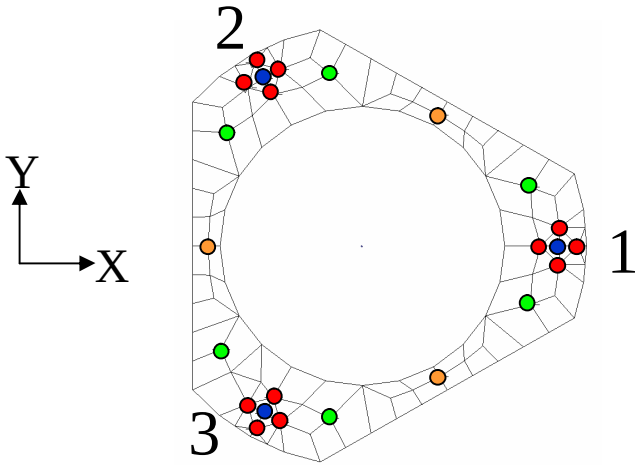

$$E(f_{n1}, f_{n2}, f_{n1act}, f_{n2act}, W_1, W_2) = W_1(f_{n1} - f_{n1act})^2 + W_2(f_{n2} - f_{n2act})^2$$

- For Post Sine Y correlation:

W_1 = 1.0
W_2 = 1.0
f_{n2act} = 451 Hz (Y Mode)
f_{n1act} = 482 Hz (X Mode)

Model Correlation

Results:

```
$   UPDATED DESIGN MODEL DATA ENTRIES
$
DESVAR *                1NCS                7.72887313E+05  1.00000000E+04+D    1V
*D    1V  1.00000000E+10
DESVAR *                2KB1                1.19993400E+06  1.00000000E+04+D    2V
*D    2V  1.00000000E+10
DESVAR *                3KF1                9.05991600E+05  1.00000000E+04+D    3V
*D    3V  1.00000000E+10
DESVAR *                4KB2                1.19993800E+06  1.00000000E+04+D    4V
*D    4V  1.00000000E+10
DESVAR *                5KF2                3.37498700E+06  1.00000000E+04+D    5V
*D    5V  1.00000000E+10
DESVAR *                6KB3                1.19594200E+06  1.00000000E+04+D    6V
*D    6V  1.00000000E+10
DESVAR *                7KF3                1.45899362E+05  1.00000000E+04+D    7V
*D    7V  1.00000000E+10
DESVAR *                8NCB1               8.14678800E+06  1.00000000E+04+D    8V
*D    8V  1.00000000E+10
DESVAR *                9NCB2               4.54948100E+06  1.00000000E+04+D    9V
*D    9V  1.00000000E+10
DESVAR *               10NCB3               1.00000000E+04  1.00000000E+04+D   10V
*D   10V  1.00000000E+10

$ MODE TRACKING HAS BEEN PERFORMED SUCCESSFULLY WITH SOME CHANGE IN THE MODE ORDER.
$ ALL THE DRESP1 ENTRIES ASSOCIATED WITH MODE TRACKING ARE WRITTEN HERE FOR CONVENIENCE.
$
DRESP1       101FN1         FREQ                        2
DRESP1       102FN2         FREQ                        1
```

Model Correlation

Results (Cont'):

Item	Initial	Post	% change
NCS	1.00E+07	7.73E+05	-92.3%
KB1	1.20E+06	1.20E+06	0.0%
KF1	3.00E+06	9.06E+05	-69.8%
KB2	1.20E+06	1.20E+06	0.0%
KF2	3.00E+06	3.37E+06	12.5%
KB3	1.20E+06	1.20E+06	0.0%
KF3	3.00E+06	1.46E+05	-95.1%
NCB1	1.00E+07	8.15E+06	-18.5%
NCB2	1.00E+07	4.55E+06	-54.5%
NCB3	1.00E+07	1.00E+04	-99.9%

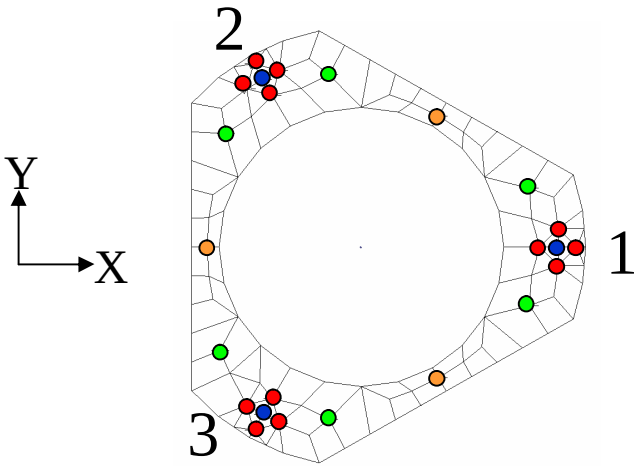

Joint Diagram

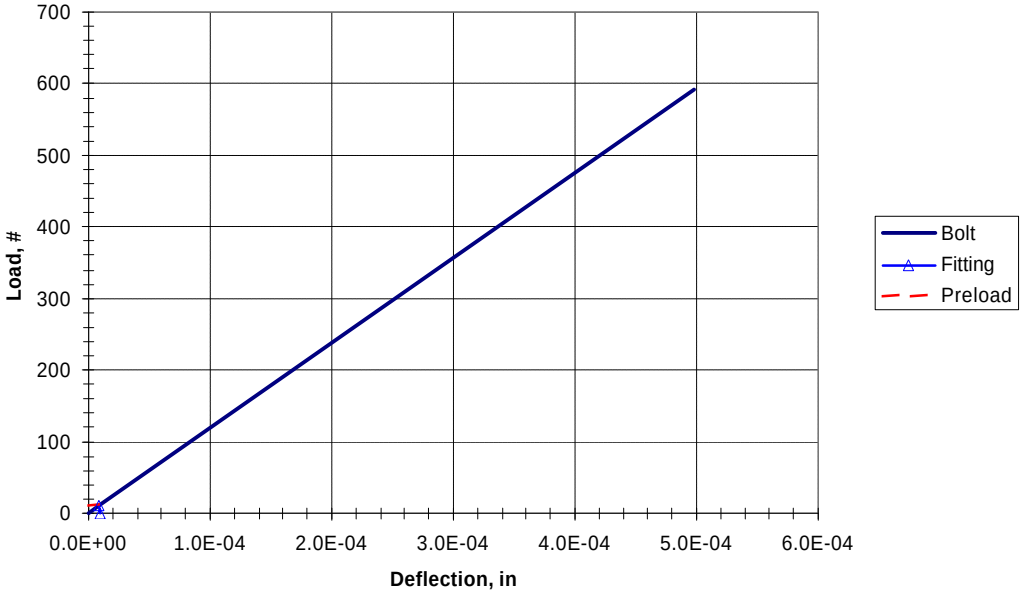

Over 90 % stiffness loss in fastener 3 (or 2)

- Preload ~0

- Results from post test investigation verified no structural failure and no other significant source for frequency shift

Conclusions

- Presence of harmonics in broadband responses indicative of nonlinearities in test data
- Optimizer is quick and efficient method to correlate modes and mode shapes of models
- Over 90% stiffness loss in fastener 2 or 3
- Results indicate preload loss is the probable cause of frequency shift

References

1. Joseph Shigley. *Mechanical Engineering Design*. Fifth Edition. McGraw-Hill, Inc. New York. 1989
2. Thomas Sarafin. *Design and Analysis of Fastened Joints for Aerospace Engineers.* Course Notes. Instar Engineering and Consulting, Inc. 2001.
3. John H. Bickford. *Handbook of Bolts and Bolted Joints.* Marcel Dekker, Inc. New York
4. Ryan Simmons. *MLA Laser Subassembly Workmanship Vibration Post-Test Report*. NASA GSFC, Greenbelt, Maryland, 2003. MLA-RPT-000127
5. Steven W. Smith. *The Scientist and Engineer's Guide to Digital Signal Processing, 2nd Edition.* California Technical Publishing, San Diego, California, 1999.
6. Scott Gordon. *Private Correspondence*. NASA GSFC, Greenbelt, Maryland.
7. Daniel Kaufman. *Private Correspondence*. NASA GSFC, Greenbelt, Maryland.