FINITE ELEMENT MODELING CONTINUOUS IMPROVEMENT
FEMCI.GSFC.NASA.GOV
NASA Goddard Space Flight Center
Greenbelt, Maryland, USA
Mechanical Systems Analysis and Simulation Branch, Code 542

JWST Multi-Mega FE Model Studies

Terry Fan/Swales Aerospace
Mark McGinnis/Swales Aerospace
Glenn Grassi/MSC.Software
John Johnston, PH. D./GSFC

May 4 & May 5, 2005

Objective & Summary

- **The objective of this study is to find an optimized computing solution**
  - Enable Multi-mega model runs and,
  - Shorten the iteration times to a reasonable time frame
- **Summary**
  - Benchmarking runs performed on several computer systems indicates that daily iteration is feasible
  - Super-element can be used to alleviate the hardware demanding, however it might prolong the iteration time.
  - Post processing of Mega-models may pose challenges. Well equipped computer will dramatically improve speed
    - RAM
    - CPU Speeds

Introduction

- **The James Webb Space Telescope (JWST) structure system is operated at 30 Kelvin with nanometer-level performance requirements.**
- **The main structure of the JWST is made of composite tubular components with a near-zero axial CTE and significant transverse CTE.**
- **The traditional so-called stick model composed of beam elements cannot capture the transverse CTE, adhesive, clips, gussets, and other effects, which preliminary analyses indicate will have an first-order impact on the prediction distortions.**
- **8-noded brick elements were chosen to model the composite structures of JWST**
  - To capture, transverse, through-the-thickness, and adhesive CTE effects
  - 30 millions degrees of freedom FEM is expected

Challenges & Issues

- **These are the largest structural models run at GSFC to date and are pushing/exceeding the limits of our computational resources**
- **Pre/post-processing cumbersome**
  - e.g. 30 min. to load model & generate pictures (2) of 4 MDOF model in FEMAP w/ a 1.6 GHz, 1 G RAM, Dell M60 precision workstation
  - Model loading time was reduced to 2 min. from 6 min. when RAM was increased to 2 GB compared
- **Integrations of Subsystem FEMs**
  - I/F definitions among subsystems
    - Element types
    - Coordinates
  - Subsystems are modeled using MSC.Nastran and IDEAS
    - Incompatibility issues caused by IDEAS converted Nastran model

Challenges & Issues

- **MSC/Nastran and Pre- & Post-processors**
  - How to run the Multi-mega model efficiently in MSC/Nastran
  - Super-element Analysis
  - Modeling guidelines
  - How to improve the pre- & post-processing time
  - What pre- & post-processors to use (FEMAP & Patran)
  - FEM mesh quality
- **Hardwires Specifications**
  - CPU architecture, i.e. parallel processing
  - CPU speed
  - RAM
  - Disk Space & I/O configuration

JWST Observatory Architecture

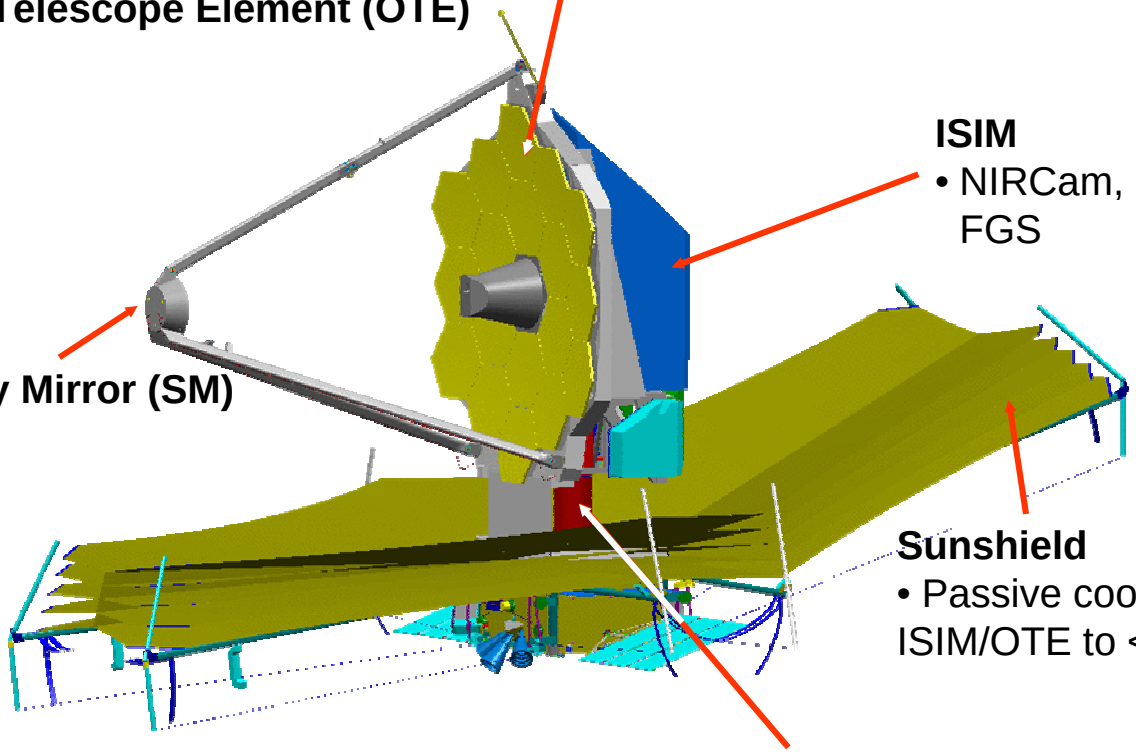

JWST Telescope Architecture

Secondary Mirror Support Structure (SMSS)

Aft Optics Subsystem (A0S)
- Fixed tertiary mirror
- Fine steering mirror
- PM baffle/radiator

ISIM Enclosure (IEA)

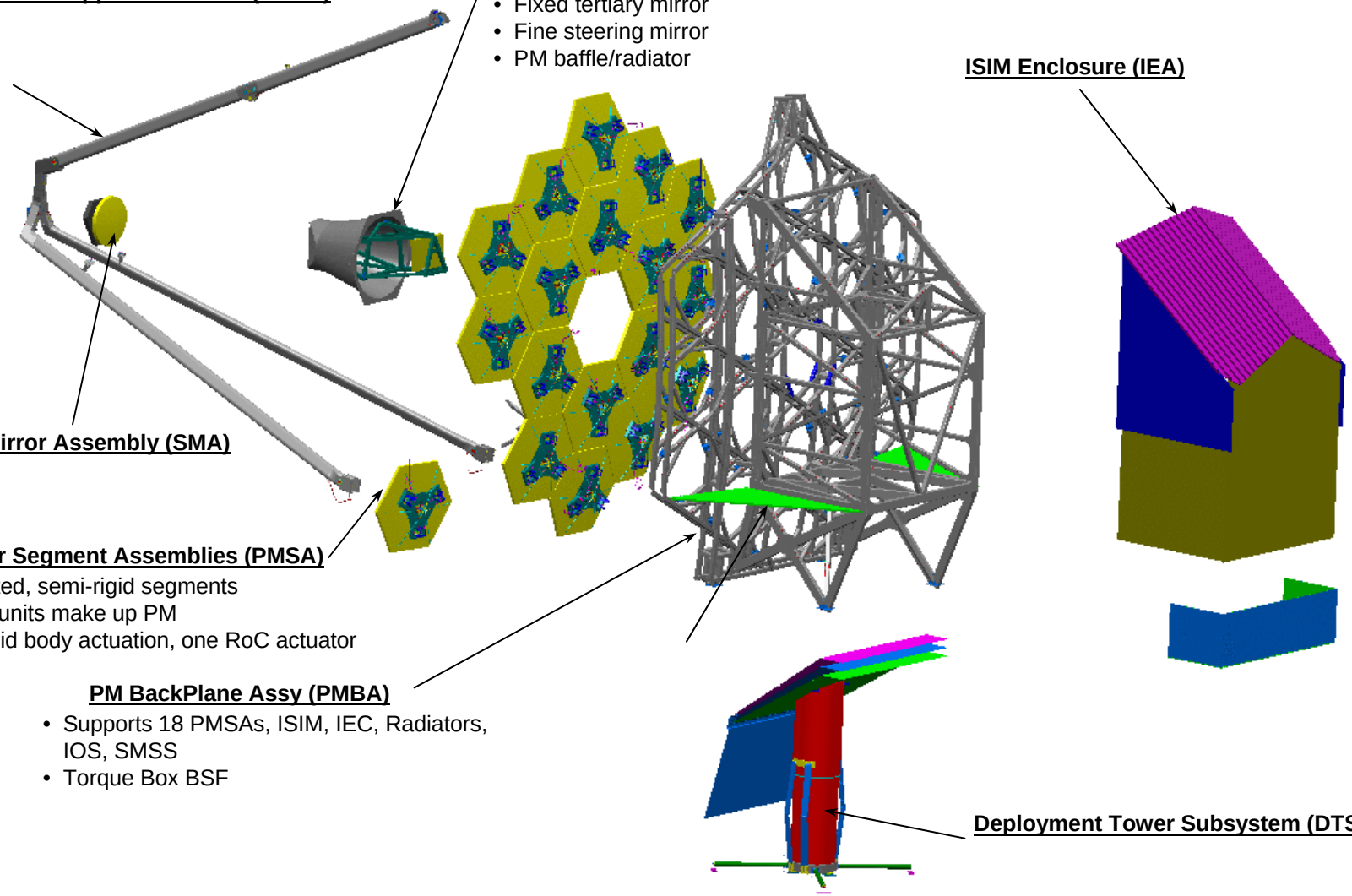

Secondary Mirror Assembly (SMA)

Primary Mirror Segment Assemblies (PMSA)
- Light-weighted, semi-rigid segments
- 18 modular units make up PM
- Hexapod rigid body actuation, one RoC actuator

PM BackPlane Assy (PMBA)
- Supports 18 PMSAs, ISIM, IEC, Radiators, IOS, SMSS
- Torque Box BSF

Deployment Tower Subsystem (DTS)

A PRELIMINARY 4 MDOF JWST FEM

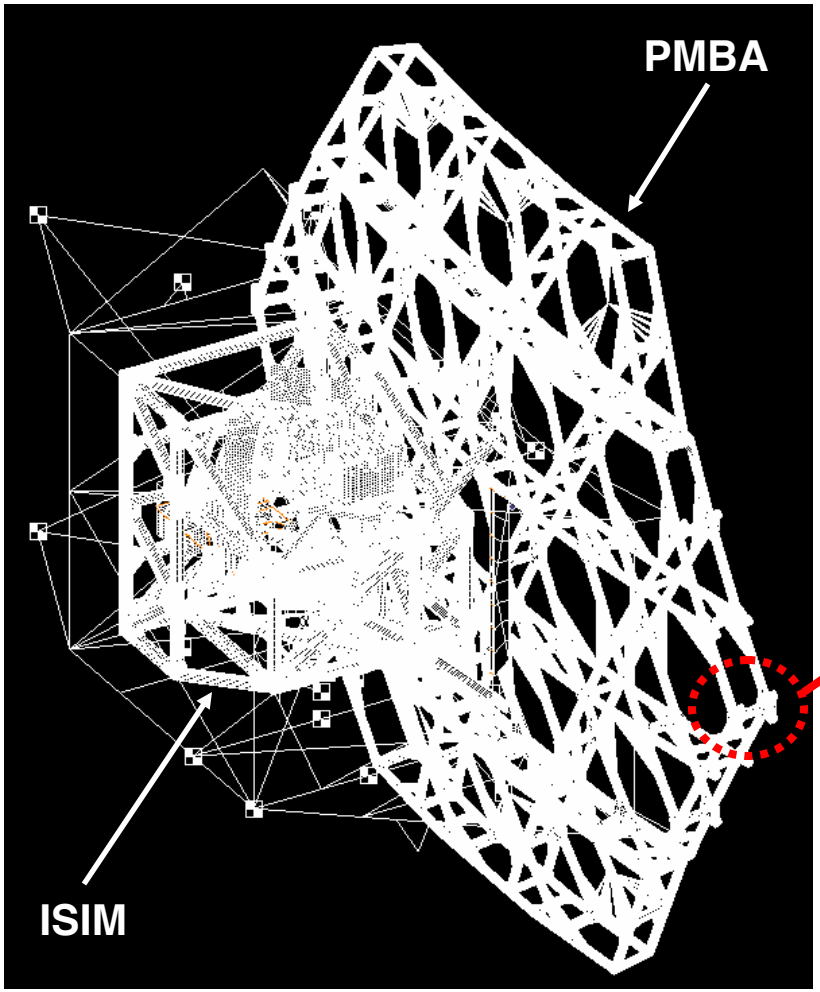

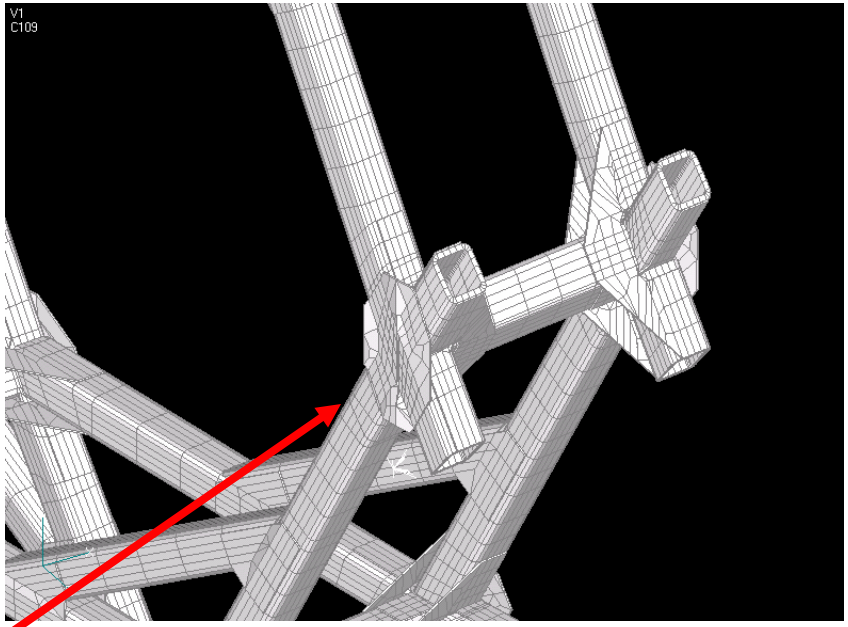

JWST system model
Brick elements are used to model the tubular structure.
Example shown is 4+ M DOFs model.

MSC.Software Mega Models Benchmarking (1/2)

- **Performed by MSC.Software**
- **Three computing systems**
  - Machine: Vesuvius
    - speed: 900 MHz
      op sys: HP-UX B.11.22
      ram: 8 Gb
      cpus: 4 Mckinley cpus
  - Machine: Sumatra - 4CPU - RAM=8Ggb
    - Hewlett Packard 9000 MODEL 9000/800/N4000-55 HP-UX (64-bit) B.11.00
  - Machine: IA647
    - Intel Itanium 2 /149 Linux 2.4.18-e.31smp
  - Nastran Version 2005.0.3 BETA
    - Residual Only - No Superelements
    - TEMPD
    - CPU=1
    - SCR=YES
    - Buffsize=65537

MSC.Software Mega Models Benchmarking (2/2)